	REVISIONS	DATE
IR	INITIAL RELEASE	3/15/05
A	REMOVED CORNERS FOR MFG PROCESS	9/15/2013

NOTES:

1. SPRING FORCE: 10 Lbs
2. MAGNETIC PULL: 6 Lbs
3. TRAVEL REQUIRED TO UNLOCK: 0.08" (2MM)
4. STRIKE PLATE PROVIDED,
   INSTALL USING #6 FLAT HEAD SCREW

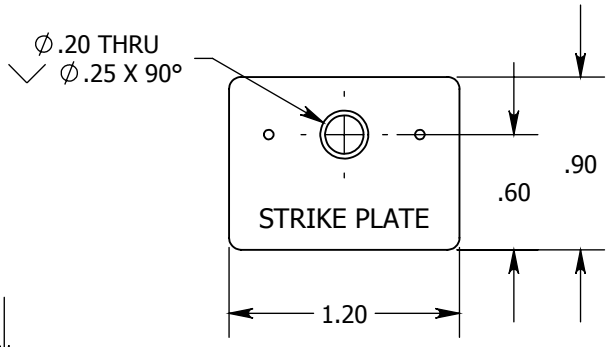

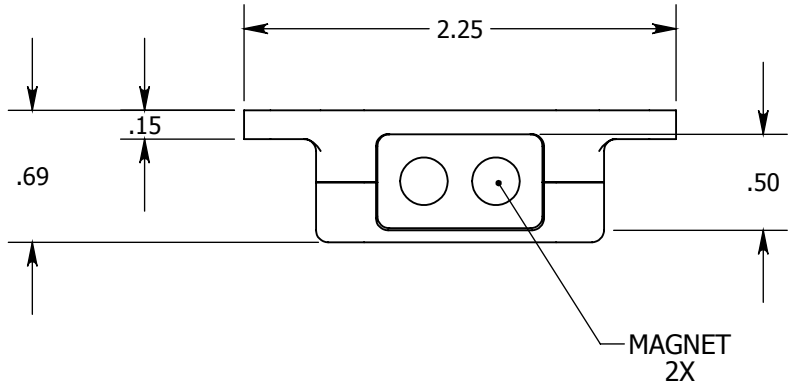

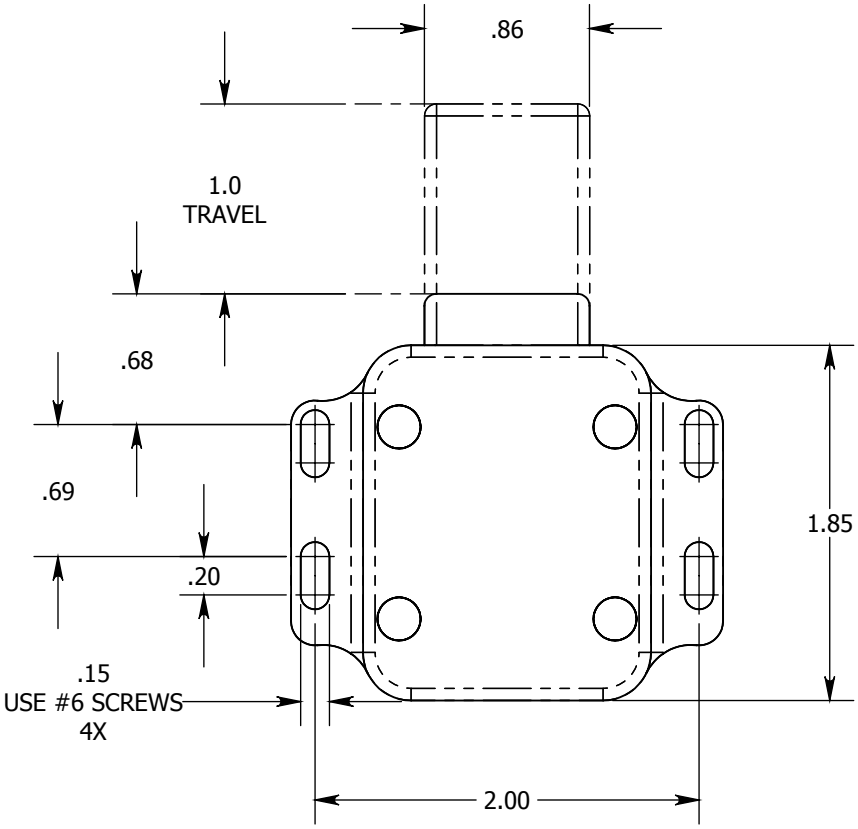

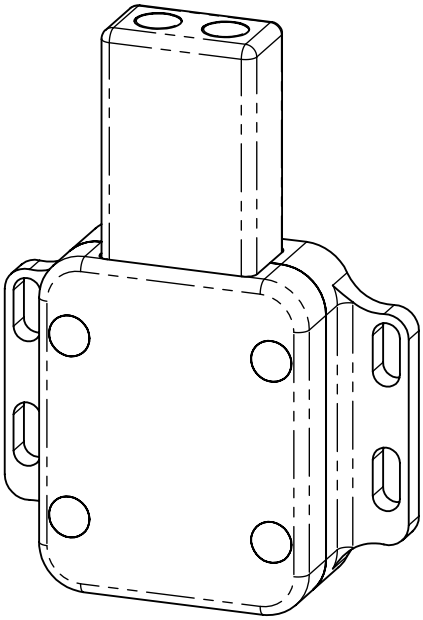

PROPRIETARY AND CONFIDENTIAL

THE INFORMATION CONTAINED IN THIS DRAWING IS THE SOLE PROPERTY OF SAINT LOUIS DESIGNS. ANY REPRODUCTION IN PART OR AS A WHOLE WITHOUT THE WRITTEN PERMISSION OF SAINT LOUIS DESIGNS IS PROHIBITED.

DEBUR AND BREAK SHARP EDGES

UNLESS SPECIFIED OTHERWISE
DIMENSIONS ARE IN INCHES
TOLERANCES:
ANGULAR: ±1°
TWO PLACE DECIMAL ±0.01
THREE PLACE DECIMAL ±0.005
SURFACE FINISH: 32 RMA

MATERIAL: VARIOUS

FINISH: ANODIZED BLACK OR CLEAR

DO NOT SCALE DRAWING

	NAME	DATE
DRAWN	MSTL	3/15/05
CHECKED		
ENG APPR.		
MFG APPR.	MSTL	3/15/05
Q.A.		

COMMENTS:

Saint Louis Designs, Inc.
PO BOX 3400, Austin, TX78764
512-472-4711, www.saintlouisdesigns.com

PUSHER, LATCHING

PATENT: 6,669,250

SIZE **A** | DWG. NO. 20125LP | REV. A

SCALE:1:1 | WEIGHT: | SHEET 1 OF 1