	REVISIONS	DATE
IR	INITIAL RELEASE	04152002
A	EDITED NOTES & TITLE BLOCK	08262015
B	TITLE BLOCK CORRECTIONS	01222017
C	ANGLE DIMENSION CORRECTIONS	04172018

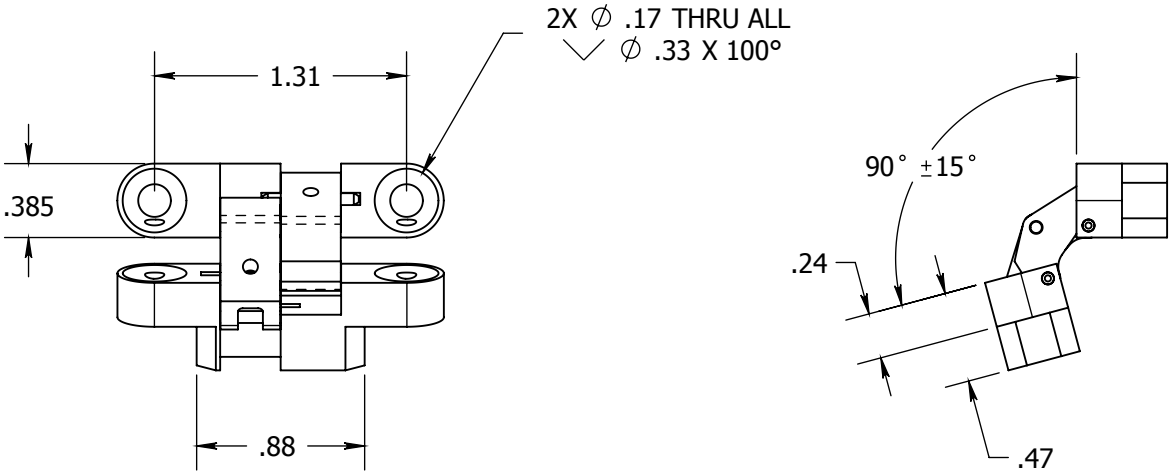

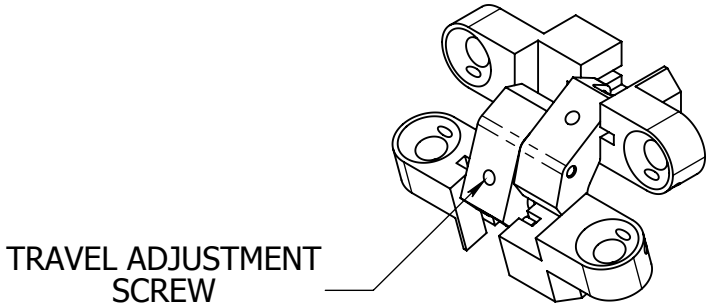

NOTES:
1. INSTALL USING NAS514P832 SCREW (4X) OR EQUIV.
2. STANDARD FINISH: BLACK ANODIZE
3. OPTIONAL FINISH: CLEAR ANODIZE
4. USE 0.035" HEX DRIVER TO REDUCE OPEN ANGLE
5. MINIMUM PANEL THICKNESS 0.50"

PROPRIETARY AND CONFIDENTIAL
THE INFORMATION CONTAINED IN THIS DRAWING IS THE SOLE PROPERTY OF SAINT LOUIS DESIGNS. ANY REPRODUCTION IN PART OR AS A WHOLE WITHOUT THE WRITTEN PERMISSION OF SAINT LOUIS DESIGNS IS PROHIBITED.

DEBUR AND BREAK SHARP EDGES

UNLESS SPECIFIED OTHERWISE
DIMENSIONS ARE IN INCHES
TOLERANCES:
ANGULAR: ±1°
TWO PLACE DECIMAL ±0.01
THREE PLACE DECIMAL ±0.005
SURFACE FINISH: 32 RMA

MATERIAL 7075-T651 QQ-A-225/8

FINISH SEE NOTES

DO NOT SCALE DRAWING

	NAME	DATE
DRAWN	MSTL	07222014
CHECKED		
ENG APPR.		
MFG APPR.	MSTL	07222014
Q.A.		

COMMENTS:

Saint Louis Designs, Inc.
PO BOX 3400, Austin, TX78764
512-472-4711, www.saintlouisdesigns.com

LIMITED TRAVEL HINGE

SIZE **A** | DWG. NO. H105-A | REV. C

SCALE:1:1 | WEIGHT: 0.04 | SHEET 1 OF 1