	REVISIONS	DATE
IR	INITIAL RELEASE	2/14/2002
A	CHANGED MOUNT HOLE LOCATIONS	3/19/2002
B	UPDATED TITLE BLOCK	11/13/2012

NOTES:

1. INSTALL USING FOUR (4) NAS514832 SCREWS OR EQUIV.
2. MOUNT PLATE IS REVERSIBLE.
3. NO BACK CLEARANCE IS REQUIRED FOR INSTALLATION.
4. 5Lbs FORCE = 20150MP-5
5. 10Lbs FORCE = 20150MP-10, ** EXTENSION IS REDUCED TO 0.70"

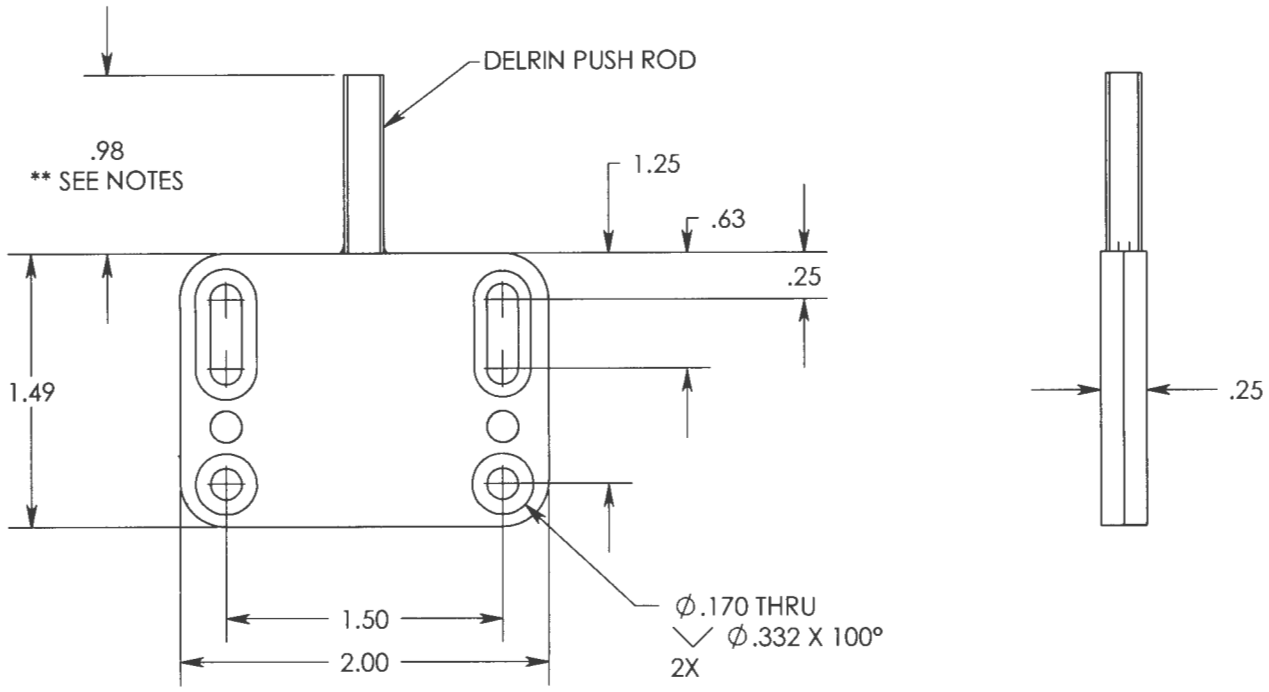

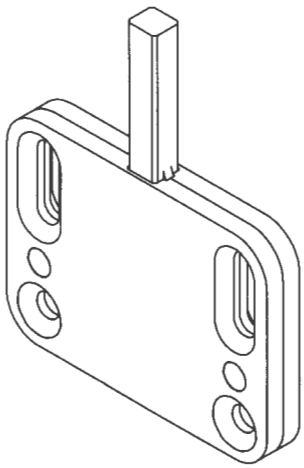

				NAME	DATE
		UNLESS SPECIFIED OTHERWISE DIMENSIONS ARE IN INCHES TOLERANCES: ANGULAR: ±1° TWO PLACE DECIMAL ±0.01 THREE PLACE DECIMAL ±0.005 SURFACE FINISH: 32 RMA	DRAWN	MSTL	2/2002
			CHECKED	CT	11/2012
			ENG APPR.		
			MFG APPR.	MSTL	11/2012
		MATERIAL 6061-T651, QQ-A-200/8	Q.A.		
		FINISH BLACK ANODIZE MIL-A-8625F, TYPE 2 CLASS 2	COMMENTS:		
		DO NOT SCALE DRAWING			

PROPRIETARY AND CONFIDENTIAL

THE INFORMATION CONTAINED IN THIS DRAWING IS THE SOLE PROPERTY OF SAINT LOUIS DESIGNS. ANY REPRODUCTION IN PART OR AS A WHOLE WITHOUT THE WRITTEN PERMISSION OF SAINT LOUIS DESIGNS IS PROHIBITED.

DEBUR AND BREAK SHARP EDGES

Saint Louis Designs, Inc.
11417 FM 1625, Creedmoor, TX 78610
512-472-4711, www.saintlouisdesigns.com

PUSHER, MOUNTED

SIZE	DWG. NO.	REV.
A	20150MP-XX	B

SCALE:1:1 | WEIGHT: | SHEET 1 OF 1